business center
SINIKALLIO
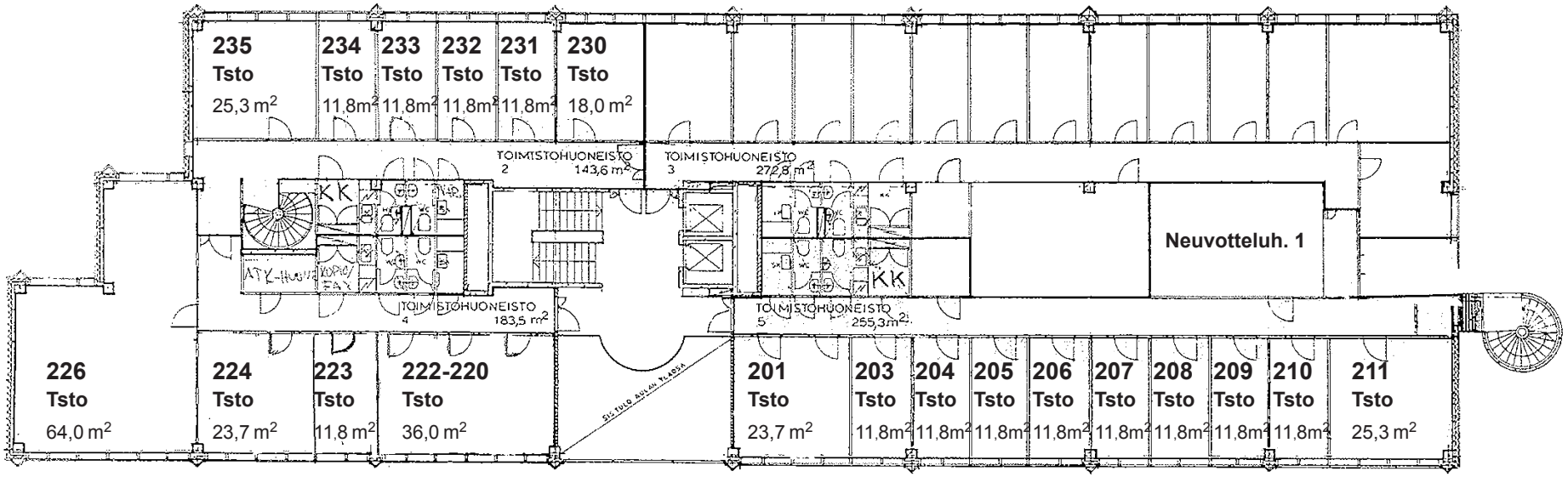
Sinikalliontie 12, 2. krs
02630 ESPOO